

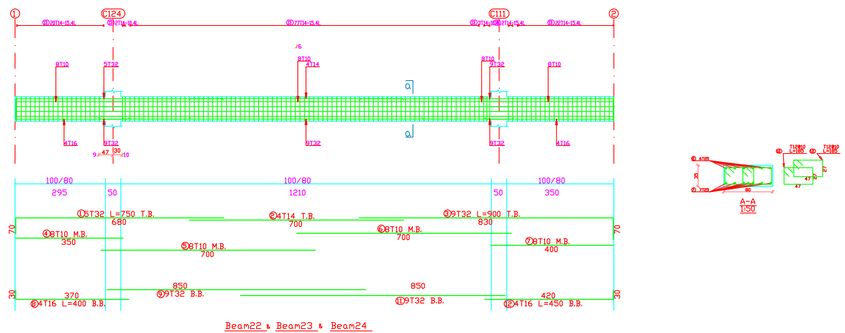

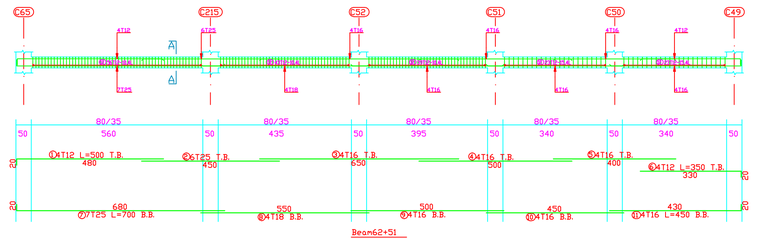

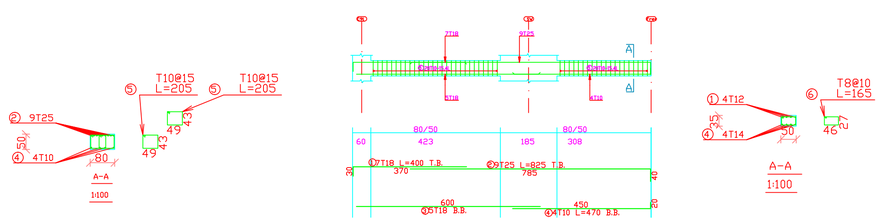

PALESTINE POLYTECHNIC UNIVERSITY

COLLEGE OF ENGINEERING

CIVIL & ARCH. ENG. DEPARTMENT

BUILDING ENGINEERING

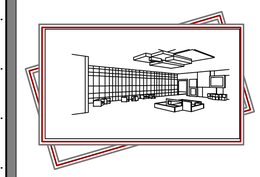

Designed by:

Ihab Talahmeh

Hammada Hosheya

Mahmoud Mahariq

Supervisor:

Dr. Riyad Abdel-Karim Awad

Project:

Dura Woman's Centre

Drawing :

Beam Detalis

No.:

S 18

Scale: 1:100

Date: 29-4-2018